CHAUVIN ARNOUX
PYROCONTROLE

SENSORS CATALOGUE

TEMPERATURE MEASUREMENT IN INDUSTRIAL ENVIRONMENTS

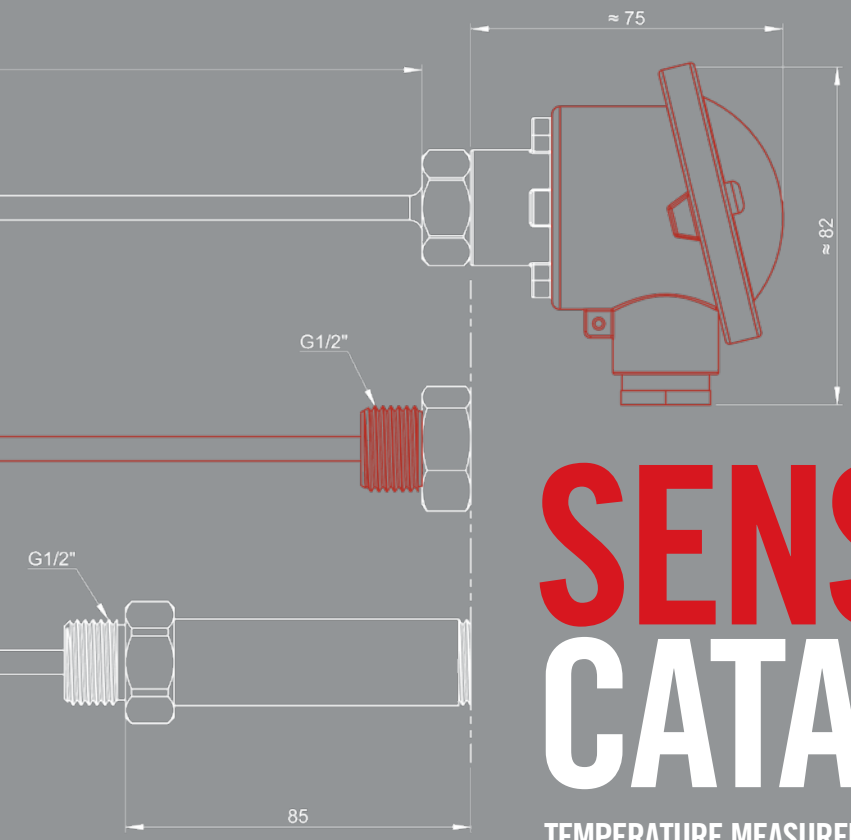

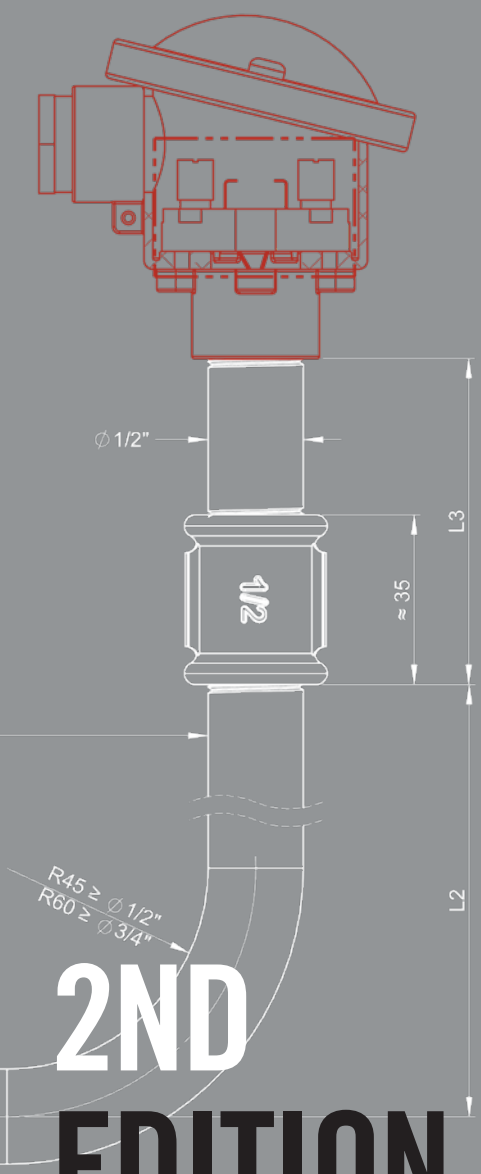

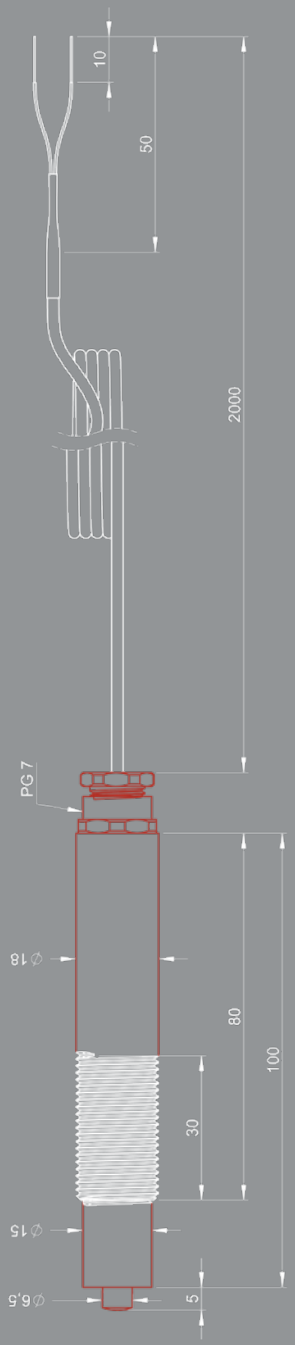

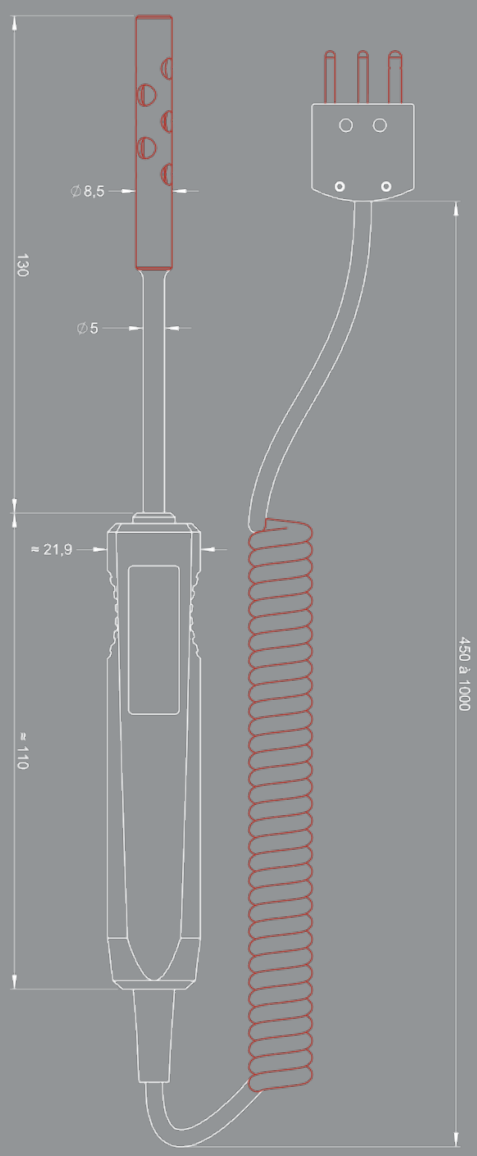

2ND EDITION

Measure up

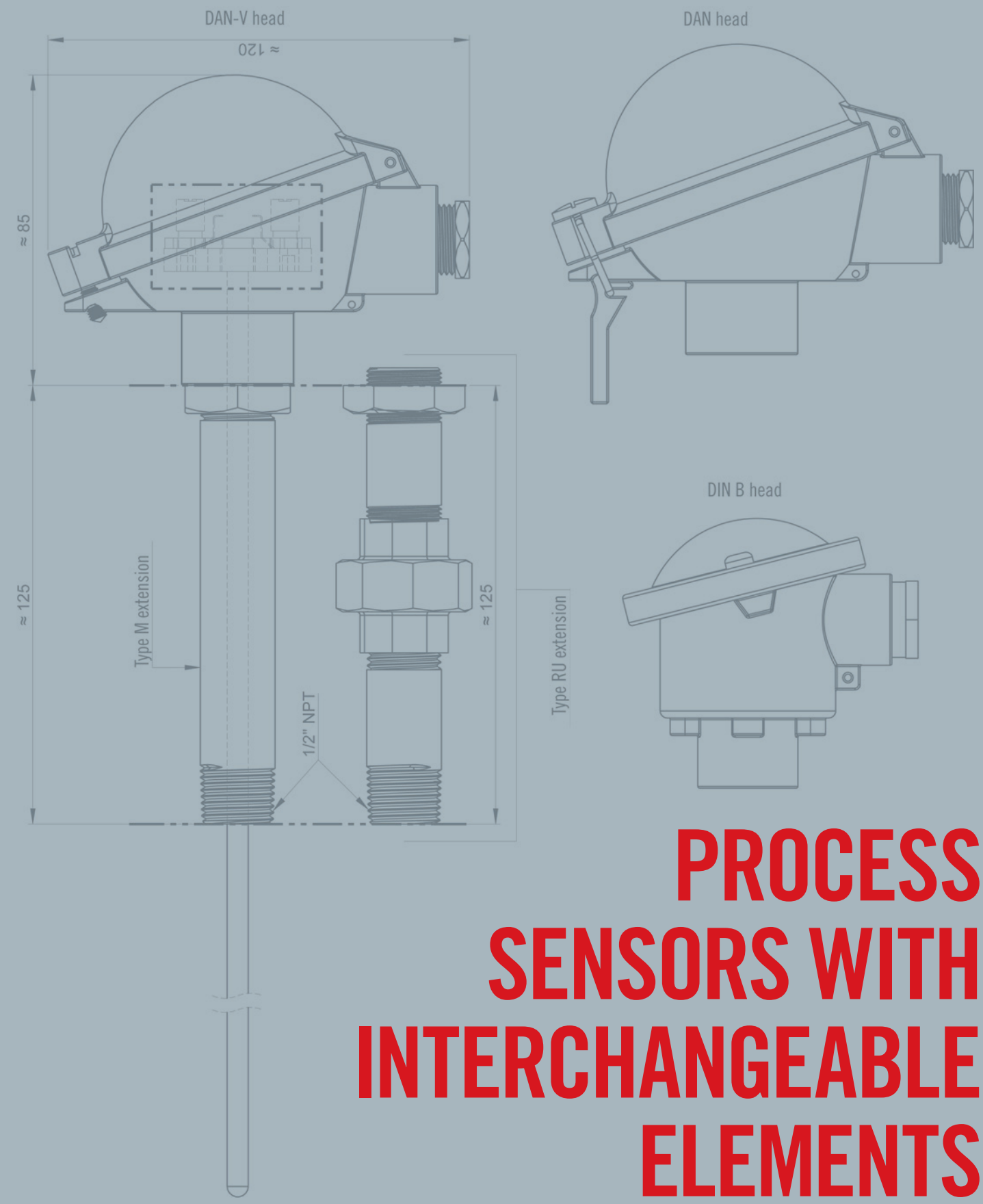

PROCESS SENSORS WITH INTERCHANGEABLE ELEMENTS

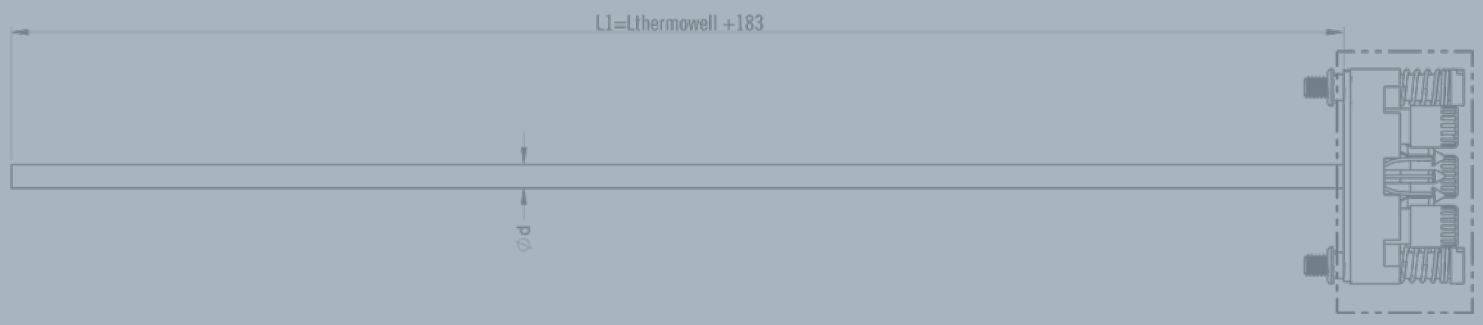

TPS: THERMOCOUPLE 174

SPS: Pt100 176

DG / TG: INTERCHANGEABLE THERMOCOUPLE ELEMENTS 178

DS / TS: INTERCHANGEABLE PT100 ELEMENTS 180

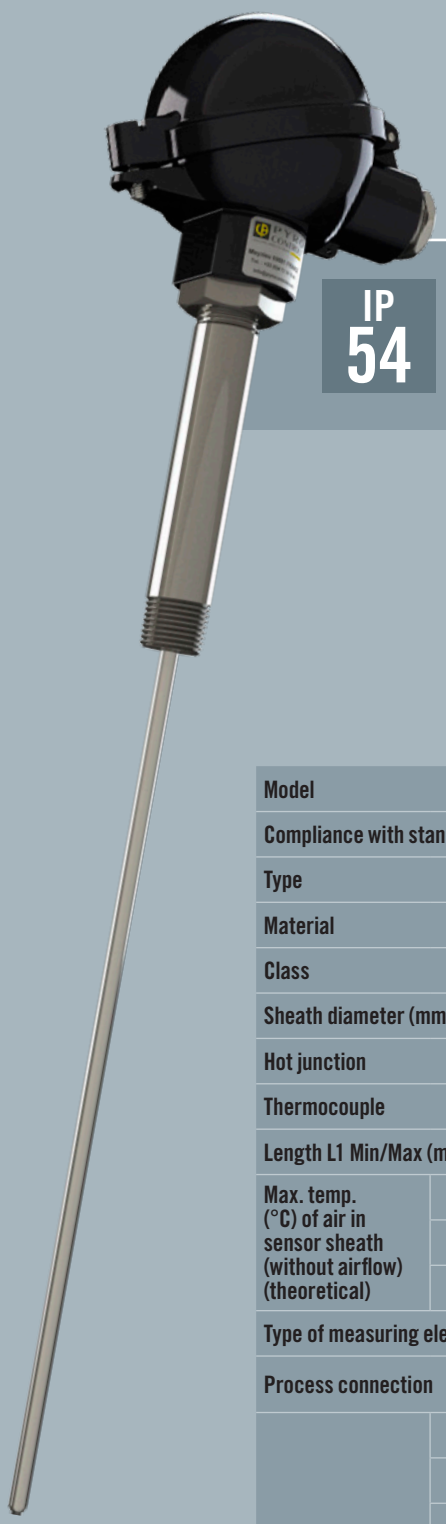

TPS
THERMOCOUPLE

IP 54 | IP 65 | CLASS 1 | IEC 584-1 | SINGLE OR DUPLEX | up to 1150°C

DESCRIPTION

Process sensor for non-hazardous zones, equipped with an interchangeable measuring element. For mounting in a thermowell (see page 270).

SPECIFICATIONS

Model		TPS				
Compliance with standards		IEC 584-1 / NF EN 60584-1				
Type		K	J	T	N	
Material		Inconel 600	316L	316L	Inconel 600	Pyrosil
Class		1		1	1	
Sheath diameter (mm)		4.5 - 6 - 8				
Hot junction		Insulated/Earthed				
Thermocouple		Single / Duplex		Single		
Length L1 Min/Max (mm)		120 to 1,500				
Max. temp. (°C) of air in sensor sheath (without airflow) (theoretical)	Diam. 4.5 mm	800°C	620°C	350°C	800°C	1100°C
	Diam. 6 mm	1000°C	720°C	350°C	1000°C	1100°C
	Diam. 8 mm	1100°C	720°C	350°C	1100°C	1150°C
Type of measuring element		DG… / TG…				
Process connection		Type M extension - Type RU extension (makes it easy to orient the head). Threading: 1/2"NPT. Stainless steel.				
Output	Head type	DAN		DAN-V	DIN B	
	Material	Light alloy				
	Output	1 cable gland M20x1.5				
	Cable diam.	5.5 to 7.5 mm				
	Equipment	Ceramic terminal strip (standard) or Transmitter				
	IP	IP54		IP65	IP54	
Accessories (p. 338)		Measuring element, thermowell, cable gland				

DESIGN YOUR SENSOR

CONFIGURATOR CODE

Parameters to be indicated when ordering. Example:

MODEL	HEAD	TC TYPE	SHEATH TYPE	Ø SHEATH (mm)	LENGTH L1 (mm)	HOT JUNCTION	EXTENSION	OPTION TRANSMITTER	OPTION TRANSMITTER SCALE
TPS	DIB	1T	AC	6	1,000	I	M	A	0/150
Reference in table and diagram	1	2	3	4	5		6	7	
Possible choice	DAN: DAN DAN-V: DAV DIN B: DIB	1T 1J 1K 1N 2K 2J	316L: AC INCONEL 600: CM PYROSIL: DB	4.5 6 8	120 to 1,500 mm	Insulated: I (standard) Earthed: M	Type M: M Type RU: R	LC5334A-100: A LC5331A-321: B LC5335A-100: C	

TABLE OF POSSIBLE ASSOCIATIONS

Class 1 thermocouple type (2)	Sheath diameter (mm) 6	Sheath diameter (mm) 8 (4)
T (class2)	316L	316L
J	316L	316L
K	INCONEL600	INCONEL600
N	INCONEL600	- (3)
	PYROSIL	PYROSIL
2J	316L	316L
2K	INCONEL600	INCONEL600

TRANSMITTER INFORMATION (7)

Transmitter			
Input	Output	Galvanic insulation	Reference
TC	4-20mA	1.5kV	LC5334A-100
TC + Pt100	4-20mA	1.5kV	LC5331A-321
TC + Pt100	4-20mA + HART	1.5kV	LC5335A-100

Not compatible with duplex version

CONNECTION ON TERMINAL STRIP

Duplex thermocouple

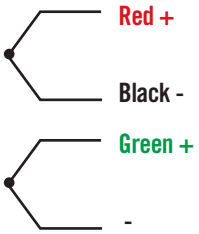

Single thermocouple

DIAGRAM (MM)

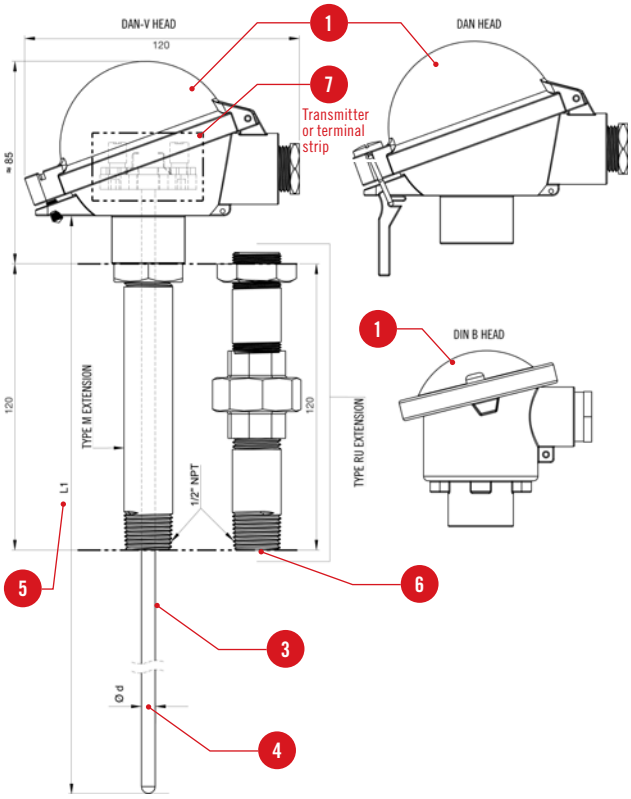

For any other configuration, please contact us.

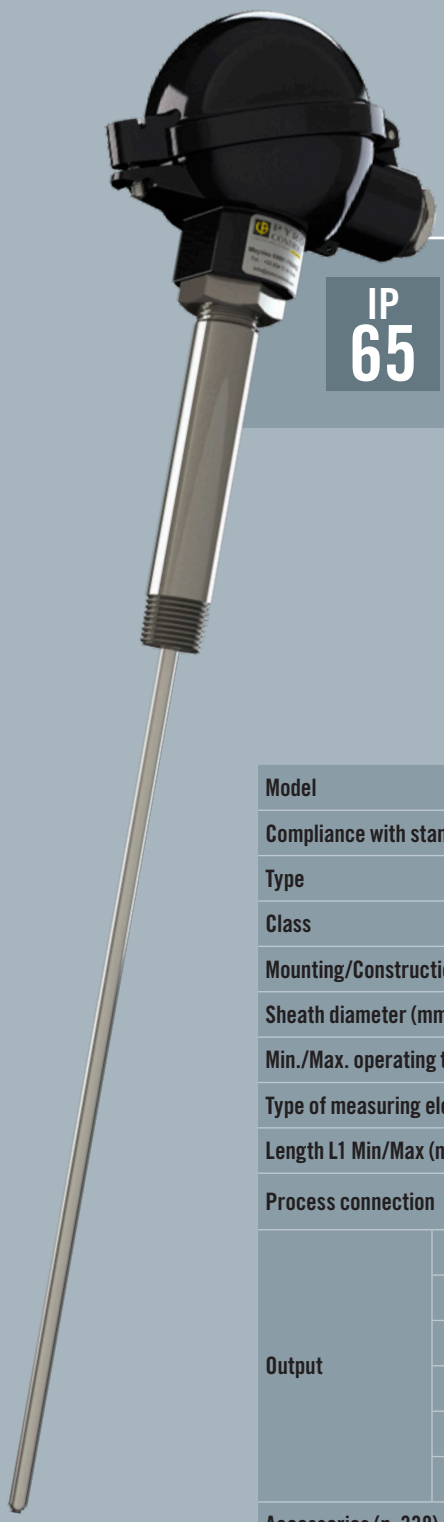

SPS

Pt100

IP 65 | IP 54 | CLASS A | IEC 60751 | SINGLE OR DUPLEX | up to 600°C

DESCRIPTION

Process sensor for non-hazardous zones, equipped with an interchangeable measuring element. For mounting in a thermowell (see page 270).

SPECIFICATIONS

Model		SPS		
Compliance with standards		IEC 60751		
Type		Pt100		
Class		A: up to 450°C - B: from 450°C to 600°C		
Mounting/Construction		1x3 wires / 1x4 wires / 2x2 wires / 2x3 wires		
Sheath diameter (mm)		4.5 - 6 - 8		
Min./Max. operating temp. (°C)		-40…+600°C		
Type of measuring element		DS… / TS…		
Length L1 Min/Max (mm)		120 to 1,500		
Process connection		Type M extension - Type RU extension (makes it easy to orient the head). Threading: 1/2"NPT. Stainless steel.		
Output	Head type	DAN	DAN-V	DIN B
	Material	Light alloy		
	Output	1 cable gland M20x1.5		
	Cable diam.	5.5 to 7.5 mm		
	Equipment	Ceramic terminal strip (standard) or Transmitter		
	IP	IP54	IP65	IP54
Accessories (p. 338)		Measuring element, thermowell, cable gland		

DESIGN YOUR SENSOR

CONFIGURATOR CODE

Parameters to be indicated when ordering. Example:

MODEL		HEAD		DIAMETER (mm)		MOUNTING		LENGTH L1 (mm)		EXTENSION		TRANSMITTER (OPTION)		TRANSMITTER SCALE (OPTION)
SPS	-	DAV	-	6	-	B	-	890	-	R	-	C	-	0/150
Reference in table and DIAGRAM (MM)		1		2		3		4		5		6		
Possible choice		DAN: DAN DAN-V: DAV DIN B: DIB		4.5 6 8		1x3 wires: B 1x4 wires: C 2x2 wires: D 2x3 wires: E		120 to 1,500 mm		Type M: M Type RU: R		LC5333A-100: D LC5331A-321: B LC5335A-100: C		

DIAGRAM (MM)

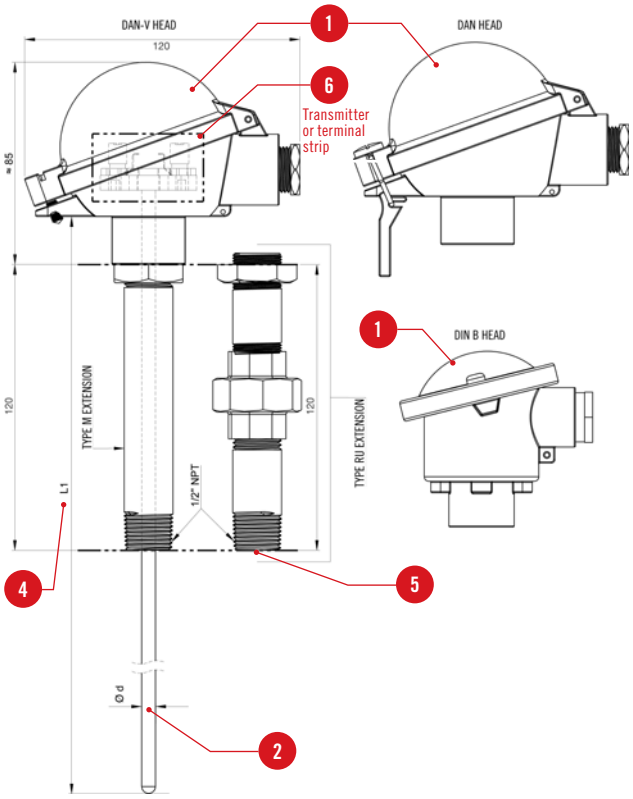

TRANSMITTER INFORMATION

6

Transmitter			
Input	Output	Galvanic insulation	Reference
Pt100	4-20mA	NONE	LC5333A-100
TC + Pt100	4-20mA	1.5kV	LC5331A-321
TC + Pt100	4-20mA + HART	1.5kV	LC5335A-100

Not compatible with duplex version

For any other configuration, please contact us.

CONNECTIONS

3

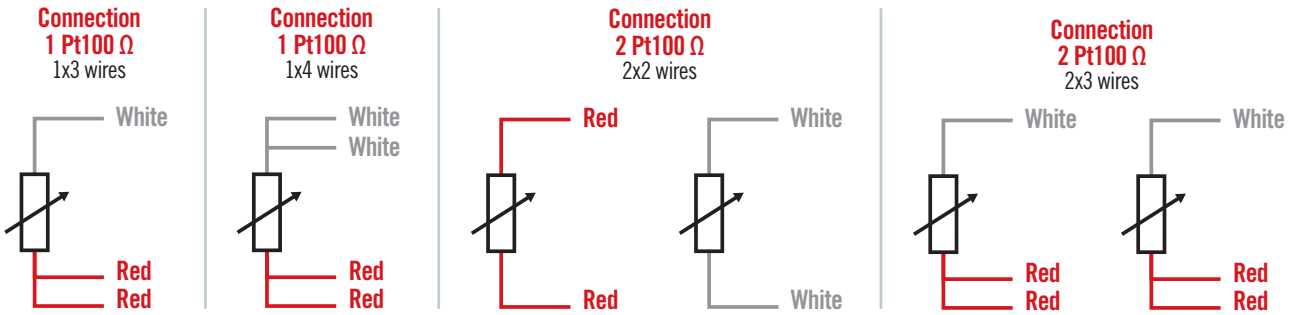

DG/TG
THERMOCOUPLE

CLASS 1 | IEC 584-1 | SINGLE OR DUPLEX | up to 1150°C

DESCRIPTION

Interchangeable thermocouple element for use in TPS sensors. Equipped with support springs for anti-vibration mounting.

SPECIFICATIONS

Model		DG... / TG...				
Compliance with standards		IEC 584-1 / NF EN 60584-1				
Type		K	J	T	N	
Material		Inconel 600	316L	316L	Inconel 600	Pyrosil
Class		1		1	1	
Sheath diameter (mm)		4.5 - 6 - 8				
Hot junction		Insulated/Earthed				
Thermocouple		Single / Duplex		Single		
Length L1 Min/Max (mm)		120 to 1,500				
Max. temp. (°C) of air in sensor sheath (without airflow) (theoretical)	Diam. 4.5 mm	800°C	620°C	350°C	800°C	1100°C
	Diam. 6 mm	1100°C	720°C	350°C	1000°C	1100°C
	Diam. 8 mm	1100°C	720°C	350°C	1100°C	1150°C

DESIGN YOUR SENSOR

CONFIGURATOR CODE

Parameters to be indicated when ordering. Example:

	TYPE OF TERMINAL STRIP	ELEMENT TYPE		DIAMETER (mm)		TC TYPE		SHEATH TYPE		LENGTH L1 (MM)		HOT JUNCTION		OPTION TRANSMITTER		TRANSMITTER SCALE
	T	G1	-	6	-	K	-	AC	-	800	-	I	-	N	-	-
Reference in table and DIAGRAM (MM)	1			2		3		4		5				6		
Possible choice	DIN ceramic terminal strip: D Socket for integrated transmitter: T	Single thermocouple: G1 Duplex thermocouple: G2		4.5 6 8		K J T N		316L: AC INCONEL 600: CM PYROSIL: DB		120 to 1,500 mm		Insulated: I (standard) Earthed: M		LC5334A-100 : A LC5331A-321 : B LC5335A-100 : C WITHOUT : N* *Socket delivered with wires unconnected (85 mm) without terminal strip or transmitter		

DIAGRAM (MM)

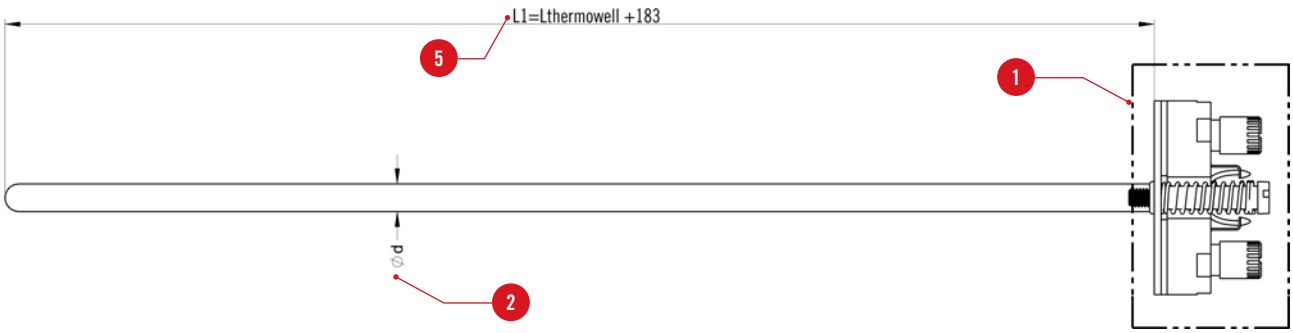

TABLE OF POSSIBLE ASSOCIATIONS

3 Class 1 thermocouple type	Sheath diameter (mm) 6	Sheath diameter (mm) 8 (2)
T (class 2)	316L	316L
J	316L	316L
K	INCONEL600	INCONEL600
N	INCONEL600	-
	PYROSIL	PYROSIL
2J	316L	316L
2K	INCONEL600 (4)	INCONEL600

TRANSMITTER INFORMATION (6)

Transmitter			
Input	Output	Galvanic insulation	Reference
TC	4-20mA	1.5kV	LC5334A-100
TC + Pt100	4-20mA	1.5kV	LC5331A-321
TC + Pt100	4-20mA + HART	1.5kV	LC5335A-100

Not compatible with duplex version

For any other configuration, please contact us.

CONNECTION

Duplex thermocouple

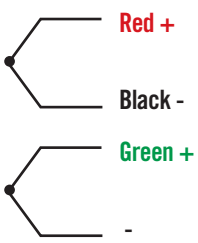

Single thermocouple

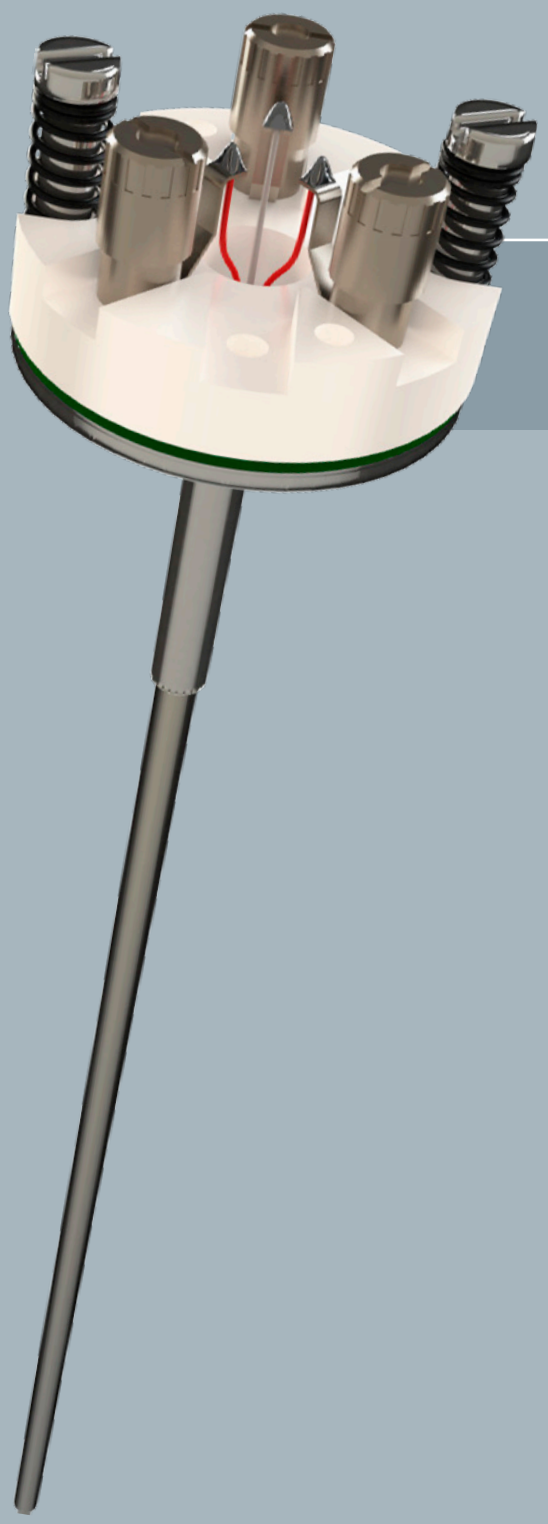

DS/TS

Pt100

CLASS A | IEC 60751 | SINGLE OR DUPLEX | up to 600°C

DESCRIPTION

Interchangeable Pt100 element for use in TPS/SPS sensors. Equipped with support springs for anti-vibration mounting.

SPECIFICATIONS

Model	DS... / TS...
Compliance with standards	IEC 60751
Type	Pt100
Class	A: up to 450°C - B: from 450°C to 600°C
Mounting/Construction	1x3 wires / 1x4 wires / 2x2 wires / 2x3 wires
Sheath diameter (mm)	4.5 - 6 - 8
Min./Max. operating temp. (°C)	-40...+450°C
Sheath material	316L
Length L1 Max (mm)	1,500

DESIGN YOUR SENSOR

CONFIGURATOR CODE

Parameters to be indicated when ordering. Example:

	TYPE OF TERMINAL STRIP		ELEMENT TYPE		Ø (mm)		MOUNTING		LENGTH L1 (mm)		EN OPTION TRANSMITTER		EN OPTION TRANSMITTER SCALE
	D	-	S1	-	8	-	4	-	900	-	A	-	0/150
Reference in table and DIAGRAM (MM)	1		2		3		4		5		6		
Possible choice	DIN ceramic terminal strip: D Socket for integrated transmitter: T		Single Pt100: S1 Duplex Pt100: S2		4.5 6 8		2x2 wires: 2 1x3 or 2x3 wires: 3 1x4 wires: 4		Max. 1,500 mm		LC5334A-100 : A LC5331A-321 : B LC5335A-100 : C WITHOUT : N* *Socket delivered with wires unconnected (85 mm) without terminal strip or transmitter		

DIAGRAM (MM)

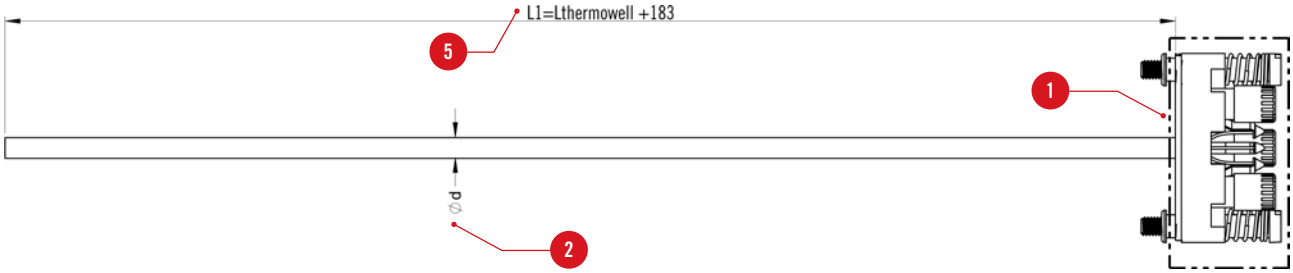

TRANSMITTER INFORMATION

6

Transmitter			
Input	Output	Galvanic insulation	Reference
Pt100	4-20mA	NONE	LC5333A-100
TC + Pt100	4-20mA	1.5kV	LC5331A-321
TC + Pt100	4-20mA + HART	1.5kV	LC5335A-100

Not compatible with duplex version

CONNECTIONS

2 4

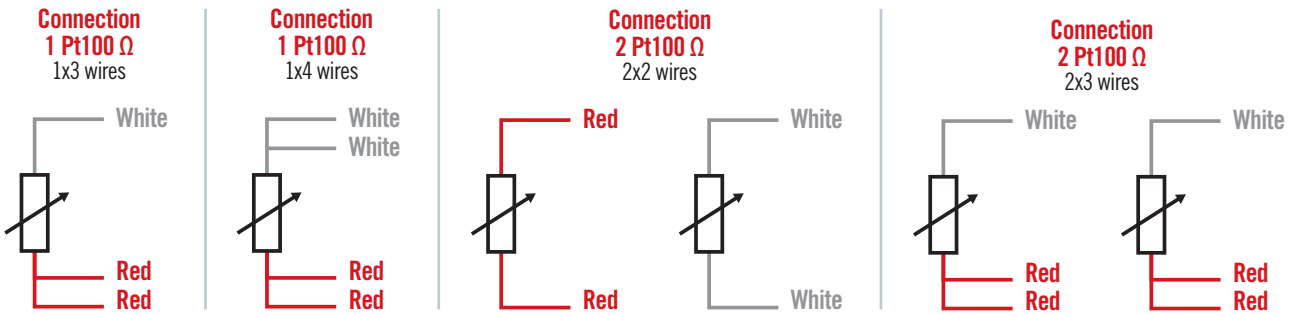

For any other configuration, please contact us.

CHAUVIN ARNOUX
Immeuble Front Office
12 - 16 rue Sarah Bernhardt
92600 Asnières-sur-Seine
Tel. : +33 1 44 85 44 85
Fax : +33 1 46 27 07 48
info@chauvin-arnoux.fr
www.chauvin-arnoux.com

CHAUVIN ARNOUX METRIX
Immeuble Front Office
12 - 16 rue Sarah Bernhardt
92600 Asnières-sur-Seine
Tel. : +33 1 44 85 44 85
Fax : +33 1 46 27 07 48
info@chauvin-arnoux.fr
www.chauvin-arnoux.com

CHAUVIN ARNOUX ENERGY
16, rue Georges Besse
92182 Antony Cedex - France
Tel. : +33 1 75 60 10 30
Fax : +33 1 46 66 62 54
info@enerdis.fr
www.chauvin-arnoux-energy.com

MANUMESURE
9, allée Jean Prouvé
92110 Clichy - France
Tel. : +33 1 75 61 01 80
Fax : +33 1 47 33 28 02
info@manumesure.fr
www.manumesure.fr

YOUR CONTACTS

FRANCE
SOUTH-WEST SECTOR
Telephone: +33 (0)4 72 14 16 31
sud.est@pyrocontrole.fr

WEST SECTOR
Telephone: +33 (0)4 81 76 02 55
ouest@pyrocontrole.fr

ILE-DE-FRANCE/NORTH-EAST SECTOR
Telephone: +33 (0)4 81 76 02 54
idf.nord.est@pyrocontrole.fr

INTERNATIONAL
PYROCONTROLE EXPORT DEPARTMENT
Telephone: +33 (0)4 72 14 15 40
export@pyrocontrole.com

10 SUBSIDIARIES WORLDWIDE

GERMANY
CHAUVIN ARNOUX GMBH
Ohmstraße 1
77694 KEHL / RHEIN
Tel.: +49 7851 99 26-0
Fax: +49 7851 99 26-60
info@chauvin-arnoux.de
www.chauvin-arnoux.de

AUTRICHE
CHAUVIN ARNOUX GES.M.B.H
Gastgegasse 27
1230 WIEN
Tél. : +43 1 61 61 9 61
Fax : +43 1 61 61 9 61-61
vie-office@chauvin-arnoux.at
www.chauvin-arnoux.at

CHINA
SHANGHAI PU-JIANG ENERDIS INSTRUMENTS CO. LTD
3 Floor, 23 Building
Gemdale Viseen Minhang Technology
& Industrial Park Project
1288 lane, Zhongchun Road Minhang
District, SHANGHAI City.
Tél. : +86 21 65 21 51 96
Fax : +86 21 65 21 61 07
info@chauvin-arnoux.com.cn

SPAIN
CHAUVIN ARNOUX IBÉRICA SA
C/ Roger de Flor N°293
1a Planta
08025 BARCELONA
Tel. : +34 902 20 22 26
Fax : +34 934 59 14 43
info@chauvin-arnoux.es
www.chauvin-arnoux.es

ITALY
AMRA SPA
Via Sant'Ambrogio, 23
20846 MACHERIO (MB)
Tel. : +39 039 245 75 45
Fax : +39 039 481 561
info@amra-chauvin-arnoux.it
www.chauvin-arnoux.it

MIDDLE EAST
CHAUVIN ARNOUX MIDDLE EAST
PO Box 60-154
1241 2020 JAL EL DIB
(Beirut) - LEBANON
Tel. : +961 1 890 425
Fax : +961 1 890 424
camie@chauvin-arnoux.com
www.chauvin-arnoux.com

UNITED KINGDOM
CHAUVIN ARNOUX LTD
Unit 1 Nelson Ct, Flagship Sq
Shaw Cross Business Pk, Dewsbury
West Yorkshire - WF12 7TH
Tel. : +44 1924 460 494
Fax : +44 1924 455 328
info@chauvin-arnoux.co.uk
www.chauvin-arnoux.com

SCANDINAVIA
CA MÄTSYSTEM AB
Sjöflygvägen 35
SE-183 62 TABY
Tel. : +46 8 50 52 68 00
Fax : +46 8 50 52 68 10
info@camatsystem.com
www.camatsystem.com

SWITZERLAND
CHAUVIN ARNOUX AG
Moosacherstrasse 15
8804 AU / ZH
Tel. : +41 44 727 75 55
Fax : +41 44 727 75 56
info@chauvin-arnoux.ch
www.chauvin-arnoux.ch

USA
CHAUVIN ARNOUX INC
d.b.a AEMC Instruments
15 Faraday Drive
Dover - NH 03820
Tel. : +1 (800) 945-2362
Fax : +1 (603) 742-2346
sales@aemc.com
www.aemc.com

906 131 137 - Ed.1 - 2020 - Non-contractual document - Please confirm specifications when ordering - Photos and illustrations non-contractual.

poissons.agency

FRANCE
PYROCONTROLE
6 bis, av du Docteur Schweitzer
69881 Meyzieu Cedex - France
Tel. : +33 4 72 14 15 40
Fax : +33 4 72 14 15 41
info@pyrocontrole.com
www.pyrocontrole.com

MIDDLE EAST
Chauvin Arnoux Middle East
P.O. BOX 60-154
1241 2020 JAL EL DIB -
LEBANON
Tel: +961 1 890 425
Fax: +961 1 890 424
camie@chauvin-arnoux.com
www.chauvin-arnoux.com

UNITED KINGDOM
Chauvin Arnoux Ltd
Unit 1 Nelson Ct, Flagship Sq,
Shaw Cross Business Pk
Dewsbury, West Yorkshire -
WF12 7TH
Tel: +44 1924 460 494
Fax: +44 1924 455 328
info@chauvin-arnoux.co.uk
www.chauvin-arnoux.com

CHAUVIN ARNOUX